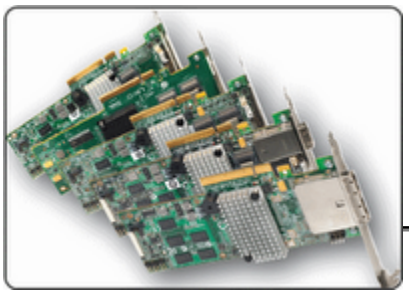

?????LSI???, IOP?RoC??????. ?????RAID Processing??: Hardware RAID? Software RAID. ????????Host???????. ???Hardware RAID????????ASIC??????, ??Host?I/O Processing??????????; ?Software RAID????????????, ?Host???? ????????I/O Processing.
LSI?IOP, ??LSISAS2008??LSISAS1068/E, ????????Software RAID; ?RoC?? LSISAS1078, LSISAS2108??LSISAS2208???Hardware RAID, ???????.

LSI???IOP(I/O Processor)?RoC(RAID on Chip), ?????????????, ?????????I/O?? ?. IOP????????RoC????, ??????????. ?????????????????RoC???????. ?????????, ??LSISAS2008 IOP?LSISAS2108 RoC?????, ????RoC?IOP??????, ??????I/O Processing???????:

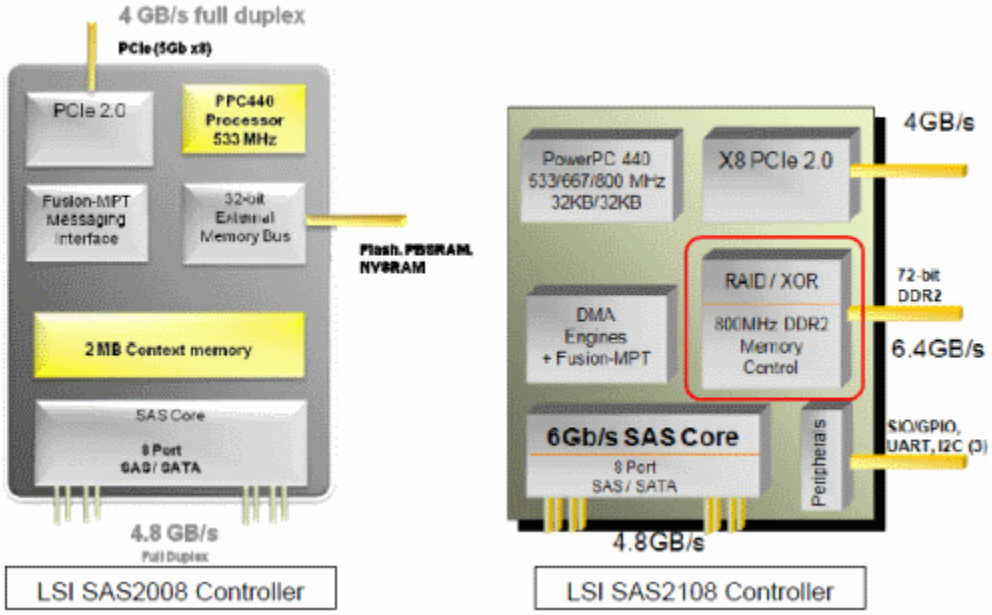

??????????????????????Built-in Processor, ??????PPC440???, ???????(Clock)???. LSISAS2008?PPC440?533MHz, ?LSISAS2108??800MHz. Built-in Processor?????I/O????, ????????, ??(Stripe)?????. ??, ????????debug???????. ??????????RoC?????????????, ?LSISAS2108???????RAID/XOR?????, ????Single-parity??Double-parity?????, ? ???????Parity RAID????, ?????I/O??, ???????. RAID/XOR????????RAID Assistant, ??????????RAID?I/O Processing. ????RAID Assistant??????????(External Memory Controller), ????????DRAM Buffer???, ?? DRAM Buffer?????Cache Memory, ?????I/O??, ???????????. ???Cache????RAID????????. Cache Memory???? ????????????????, ??????????(Hot-data), ??Cache Memory?????Hot-data Buffer.

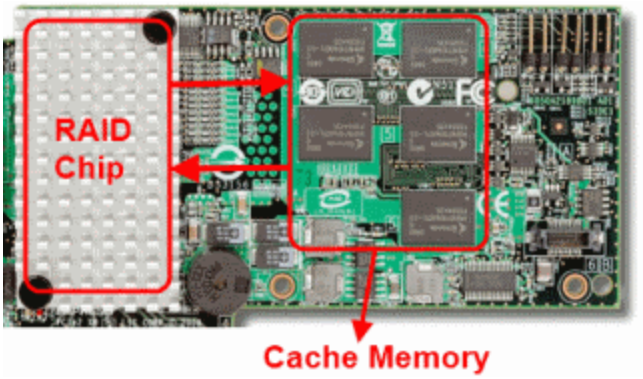

???Parity RAID??, ??RAID 5??RAID 6, ??Cache???????, ??Cache Memory?????. ??????, ??????XOR????Parity, ?????????????, Full-stripe Write, Read-Modify-Write??Reconstruct Write, Parity??????????, ?????Parity??????????Cache Memory, ??????????1ms????. ???????Parity???????????Cache Memory?, ??????????Write-back Caching. Write-back Caching??Parity RAID?????????, ??????HD Tune Pro??????, ???Process Explorer??Disk I/O?????, ??Write-back Caching???????, ???WD SAS 2.0 1TBx4?RAID 5(256KB, Disk Cache Enabled)???????:

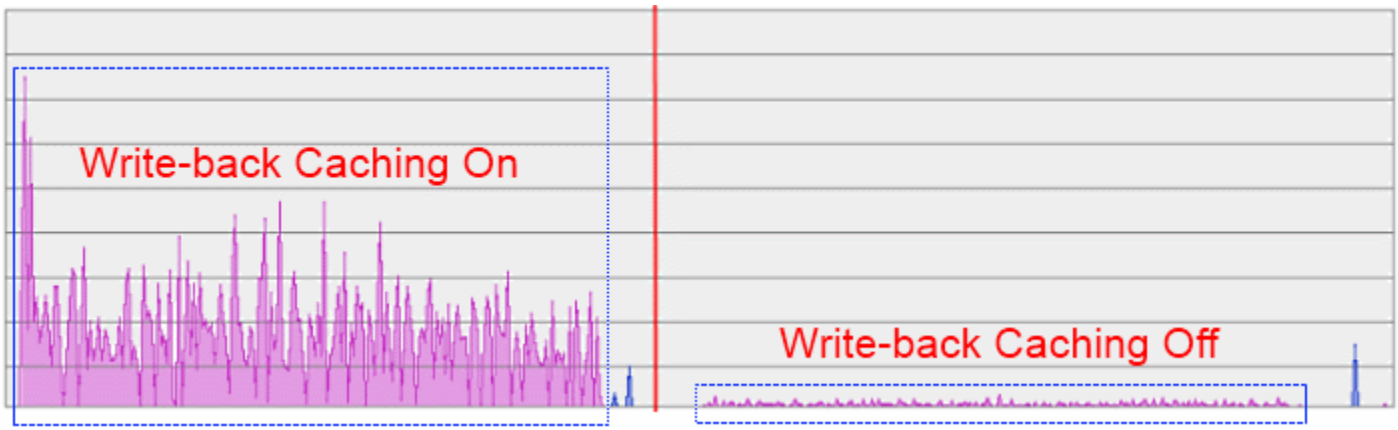

?????Write-back Caching??Parity RAID????????, ???Write-back Caching???Write-through. ????????????????, ???????Full-stripe Write, ??????????, data blocks???????????, ????????7?new data blocks??, ??????2????old data blocks????, ??7??new data blocks??XOR?????new parity block, ???new data blocks?new parity block???PDs?, ??????????. ??Write-back Caching????, ????PDs????I/O????, ?????????????, ???Write-back Caching?????new data blocks?new parity???Cache Memory, ?????????????, ????RAID f/w?????, ????????flush?PDs?, ??????Cache Flush. ???????????Write-back Caching??Parity RAID??????????.

????, LSI???IOP??Disk Cache Policy??, ??Cache Policy????, ??Read Cache??Write Cache. ?Parity RAID???, ?????????????. ?????HD Tune Pro??????, ?????????????:

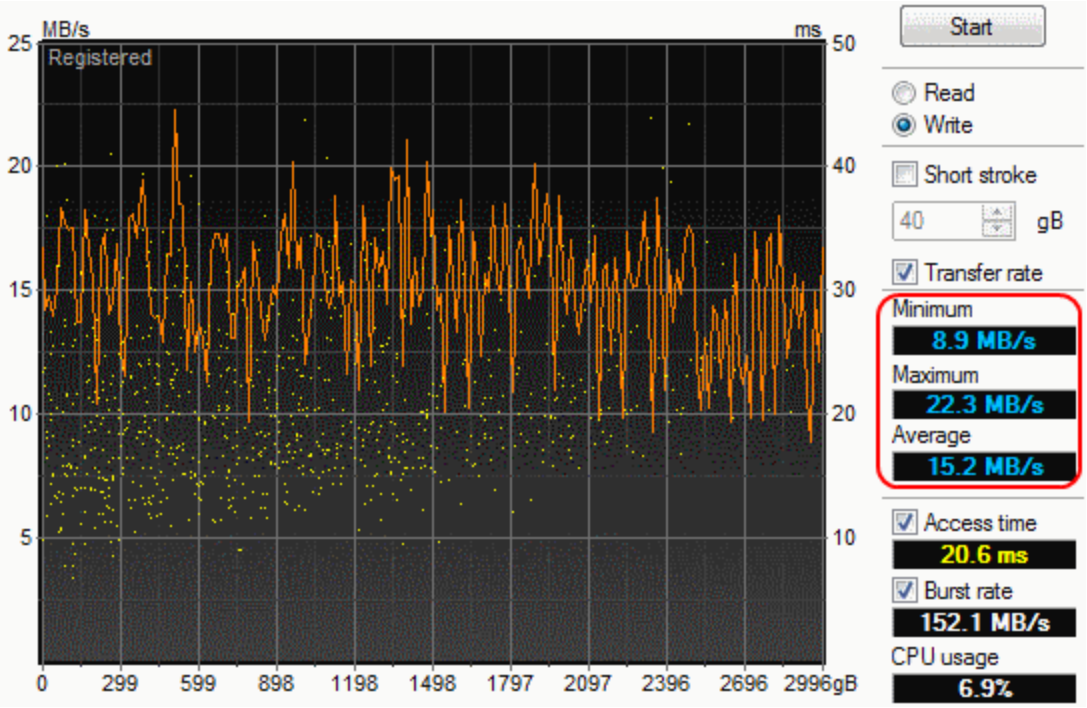

?????RoC???RAID Assistant, ????XOR????, ?IOP???????, ??IOP??Parity RAID??????Host??????????I/O Processing. ???????RAID f/w????????????, ??IOP?RoC???RAID stack???. ??Software RAID?Hardware RAID?????, ??Adaptec??????????, ???RAID???Stack????:

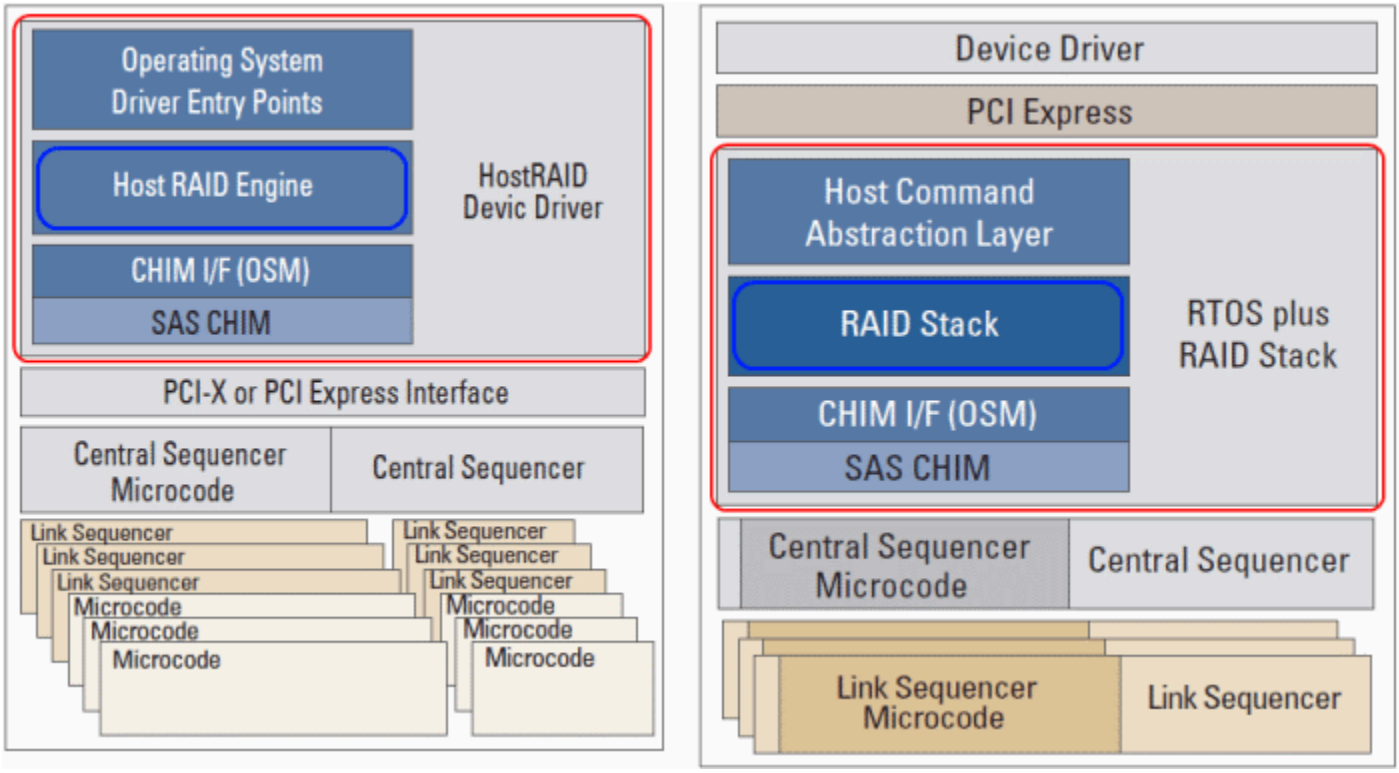

??????Software RAID?Hardware RAID?Software Stack??????,HostRAID Device Driver??????????????RAID I/O Processing, ???Software RAID?????????????; ?Hardware RAID???BIOS initializing???, ???RAID Controller ?????I/O Processing, ??????????????????Firmware, RAID f/w????????????, ??????????????????????RAID I/O Processing, ????????????????. ?????????Software RAID?Hardware RAID?????.

```
LSI MegaRAID SAS-MFI BIOS
Version 3.24.00 (Build October 26, 2011)
Copyright(c) 2011 LSI Corporation
F/W Initializing Devices 0%
```

????????????, ?LSI?MegaRAID??????, ???RoC??IOP, ?????RAID f/w?????????, ?????????????????, ?????RAID f/w????????????????. ????LSI?RoC??IOP??Firmware-based?, ?Intel??????????????????????, ????:

Features	ESRT2	RSTe	IR RAID	IR3 RAID
Silicon Support	Intel Chipset	Intel Chipset	LSI 1068, LSI 2008	LSI 1068 + Intel 80333, LSI 1078 ROC, LSI 2108 ROC
RAID Algorithm Location	Driver	Driver	Firmware	Firmware
Driver	MegaSR.sys	iaStor.sys	mpt_SAS2.sys	MegaSAS.sys
Driver Package	ESRT2	iMSM	LSI-SAS2	IR3
Utilities	RWC2, CMDtool2, ESRT2CLI (DOS)	Matrix Storage Manager	RWC2 (limited), CFGGen	RWC2, CMDTool2, API
RAID Levels	0,1,10,5(R5 requires key)	0,1,10,5 (Limited Linux Support)	0,1,1E,10	0,1,5,6,10,50,60
XOR	System CPU	System CPU	NA	ROC Chip
Memory Usage	System Memory	System Memory	2MB Context Memory	Up to 2GB via ROC Chip Memory Controller
Battery Support	No	No	No	Yes
Number of Drives supported	8	6	16	240
Persistent Controller Log	No	No	No	Yes

??????????????MegaRAID Stack?LSISAS2008, ?????????IR3 RAID?, ????????, ?????! ???ERST2??RSTe????? driver-based RAID, ??Software RAID. ?????????IR3 RAID???, IR3 RAID??LSI?MegaRAID Stack, ?BIOS initializing???, RAID f/w?????????????????????I/O Processing, LSISAS2008??RoC??????????, ????BIOS initializing???, ???????.
LSISAS2008????Host?????, ???Parity RAID???, ??RAID f/w??????????Host???????, ??CPU?????????. ?????? driver-based RAID??, ??????. ?????????????????????, ?????IP Core???Firmware?, RAID f/w????RAID Controller?????I/O Processing?????????, ??????BIOS UI?????????I/O??, ????????????????, ??OCE,ORLM?? Media Scans?..., ????IOP??RoC??????????, ?????????????????????. IOP??RAID f/w???????Host??.
LSI???Software Stack?Hardware Stack????, ??????????????I/O??-Fusion MPT, ?????????????, ???????. ???? ???????Firmware Level??, ?????????????????????, ??????Fusion-MPT???????:

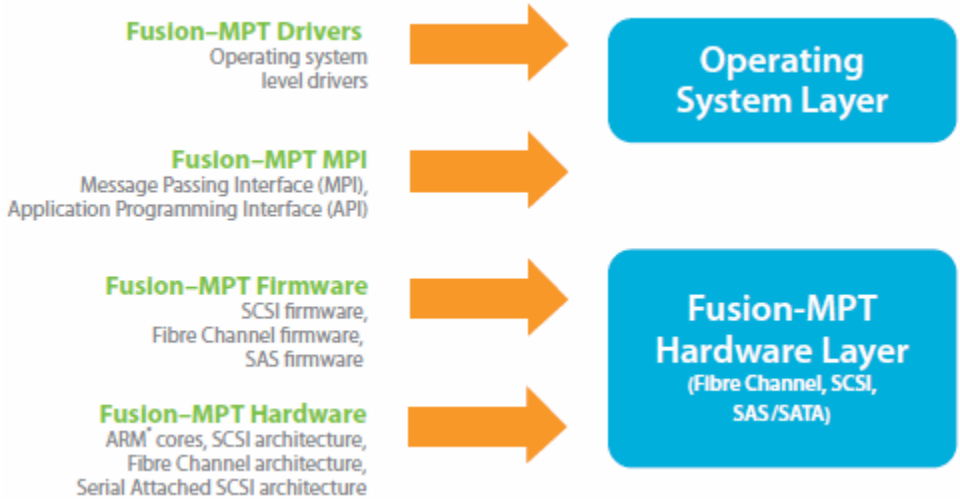

??Fusion-MPT??, LSI?MegaRAID?????????, ??????RAID f/w????, ??Intel??????????????????????????, ????:

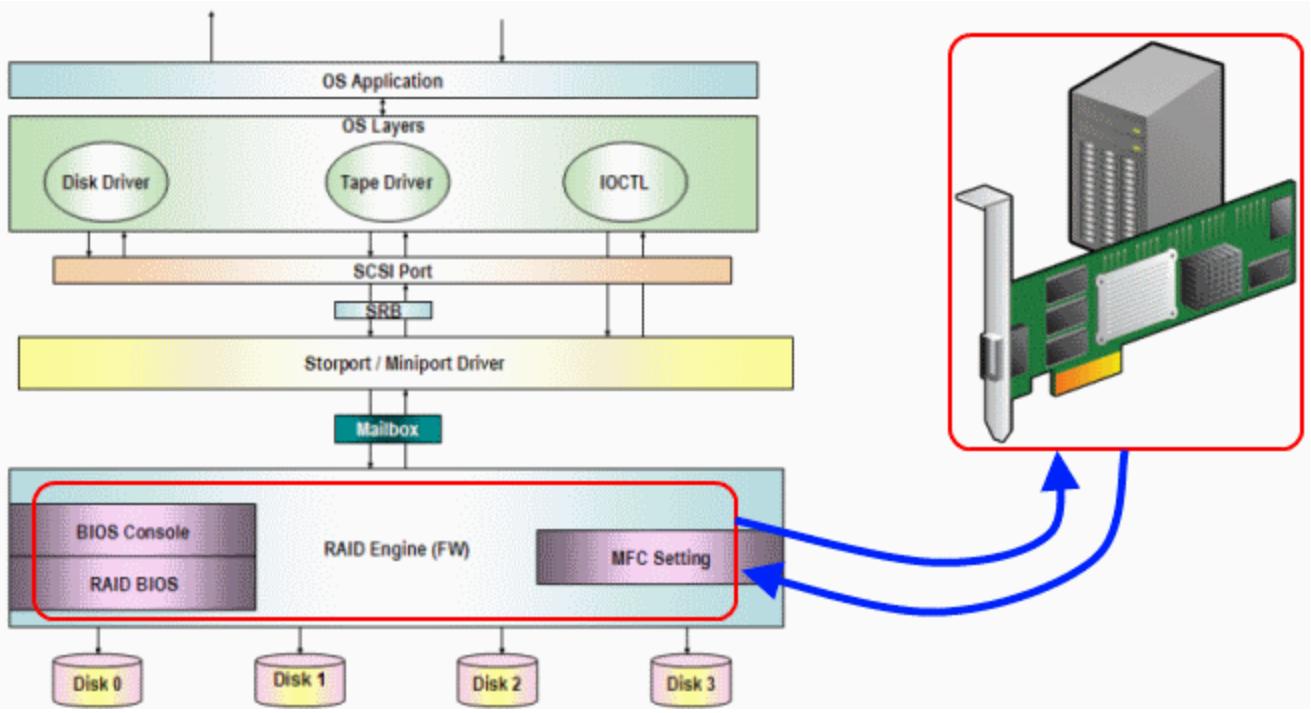

Miniport Driver?????????????????(function driver)??, ????RAID Engine??, ????????. RAID Engine?????????? ?Firmware?, ????????: BIOS Console, RAID BIOS?MFC Setting, ??????????????:

- BIOS Console: ??????????UI????, ????????.
- RAID BIOS: ???PCI?????ROM??, ?????????????????????(POST).
- MFC Setting: ???????(factory setting), ????????; ????????(???????????NVRAM?).

????????, RAID Engine????LSI??IP Core???RAID?????????, ??RAID??, OCE, ORLM?..Miniport Driver????????? (Driver Entry), ?????API????RAID Engine????. ?????????????????Firmware??. ??MegaRAID??v3.x?????????? (Advanced Software Options), ????????, ?????Firmware????????. RAID f/w????target dvices?????I/O????.

RAID f/w?????????????, ??IOP?RoC???????, LSI??RAID f/w?IOP????RoC??, ????????. ???????IOP?RoC? MegaRAID Stack?????:

RAID on Chip(RoC) I/O Processor(IOP)	Intel RAID Entry	Intel RAID Mainstream	Intel RAID Performance
Hardware RAID solution	Yes	Yes	
Firmware base code	Intel RAID	Intel RAID	
Full O/S support	Yes	Yes	
Specific HW support	Only LSI SAS IOC with 2MB CRAM	LSI SAS IOC/ROC	
Battery Back Up support	No	Yes	
WB Cache Policy	No	Yes	
Max. Device per controller	64	32	240
Max. PD for RAID configuration	16	32	240
Max . Disk Group per controller	8	16	
Max. VD per controller	16	64	
Max. PD per Disk Group	16	32	
Max. VD per Disk Group	16	16	
HDD Pass-thru Support***	Yes	No	
No. Pass-thru devices	64	No	
Max. No. of Hot Spare Drives	8	32	240
Hot Spare	Global/Dedicated		
FDE Support	No	Yes	
SSD support	Yes		
RAID Level	0/1/10/5**/50**	0/1/10/5/50/6/60	
Max. Outstanding I/O	32	1024	
Variable Stripe Size	Yes, up to 64K	Yes, up to 1MB	
Cache Policy (WB)	No	Yes	
LED Control	In-band SES-2 SGPIO	SES-2/SGPIO/Discrete LED	
Maximum number of Bad Blocks per Logical Volume (managed)	254	4092	
Import Configuration	IR & Intel RAID	IR & Intel Entry RAID	
RAID Management	Intel RAID Web Console		

??????????IOP???RAID??????????, ???target device??VD???????. ???????????RoC?????, ???MegaRAID?????? ??????.

LSI??IOP?RoC??????????RAID f/w?RAID Controller??, ?????????, ??layout??????, ??IOP??RAID????????????? ???. ?????, ?????????layout??:

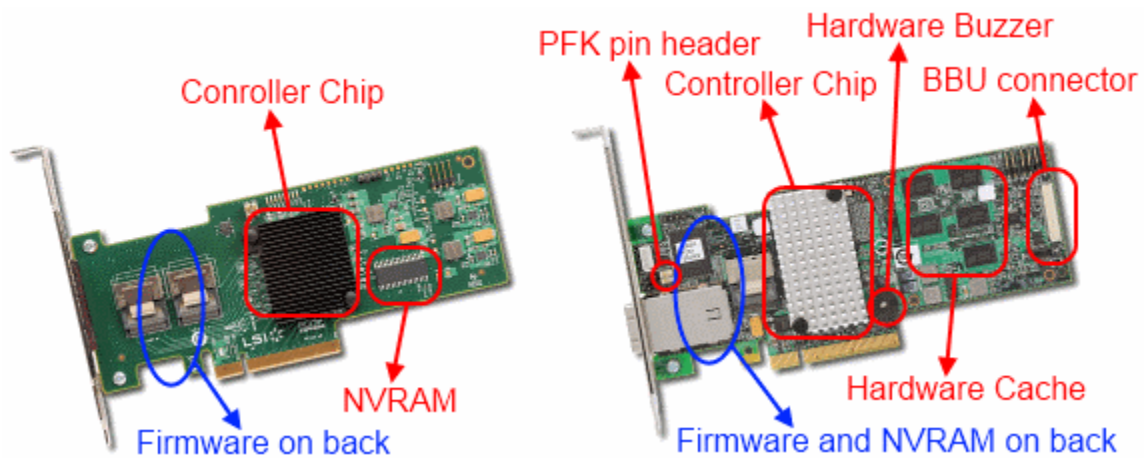

????RAID HBA, ?????LSISAS2008 IOP?MegaRAID SAS 9240??; ????LSISAS2108 RoC?MegaRAID SAS 9260??. ?? ??????LSISAS2108 RoC?????????Enterprise RAID??, PFK?????RoC?????, ?LSISAS2008 IOP?????9240??????PFK ????, ?????????SafeStore??????. ??????????NVRAM??Write-journaling, TTY Log????????????(????????). ????????Enterprise RAID??, LSI????RoC?????????????MegaRAID, ?????????. ?IOP??MegaRAID??????RoC???? ????, ????RAID f/w??????, ??IOP?MegaRAID??????????.